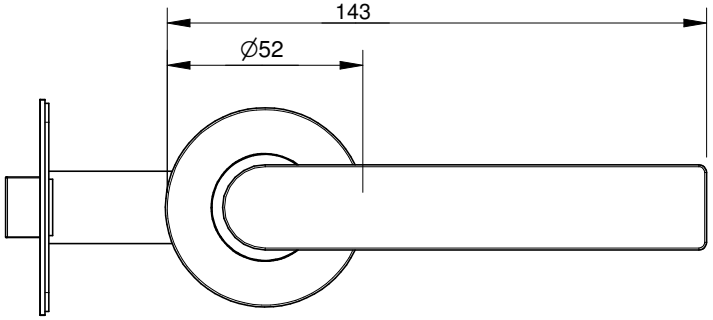

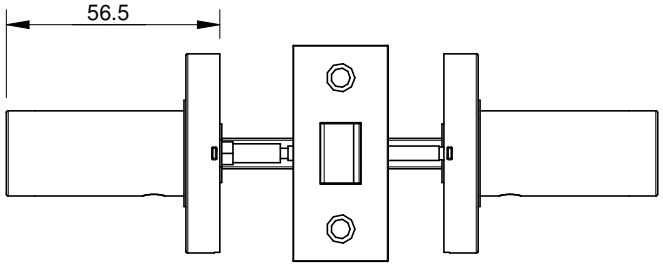

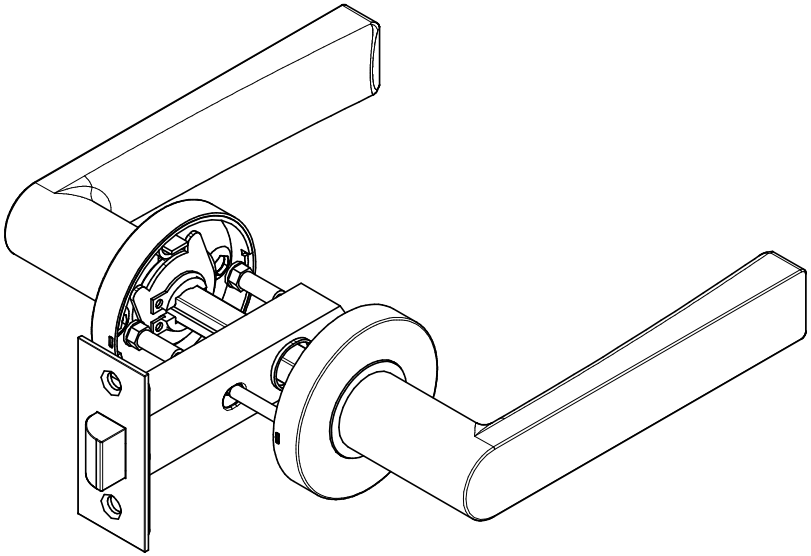

ISSUE	CHANGE DESCRIPTION	DATE

General (mm)
Tolerance

Linear
0.0 ± 0.05mm
0 ± 0.2mm

Angular
± 0.2

MILES NELSON

228 KITCHENER RD
MILFORD, AUCKLAND,
NEW ZEALAND.
PH: 64 9 489 7225
FAX: 64 9 489 5552

THIS DESIGN AND DRAWING IS THE COPYRIGHT OF MILES NELSON MANUFACTURING CO LTD AND IS NOT TO BE REPRODUCED WITHOUT WRITTEN PERMISSION

TITLE
621 Tiber Lever Handle

DO NOT SCALE
IF IN DOUBT ASK

SCALE 1:2

DRAWN BY K.P.

APPROVED BY

DATE

DRAWING NO. C621

SHT__OF__